Standtop Technology Group Co.,Limited

Shenzhen Standtop Electronics Co.,Ltd

Address: Rm 212, Zhongzheng Sci-Tech Innovation Park, No. 90-2 Xintang Road,Fuhai, Baoan District,Shenzhen,China

Tel: +86-755-27322079 WhatsApp/Wechat:+86-13826556522

E-mail: sales@standtop.com Https://www.standtop.com

Products Name: Starlight AHD 1080P Rear & Side Camera

Model number: ST-C22A

Product photo



2D Drawing

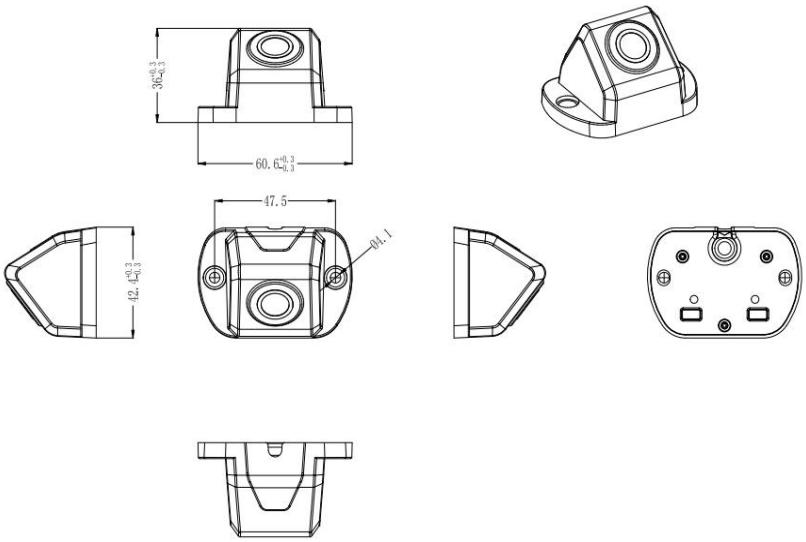

Specification

Camera Housing and bracket	Zinc alloy
Image Sensor	1/2.9" CMOS V25H
Resolution	AHD 1080P,2MP pixels
Frame rate	1080P: PAL: 25f/s NTSC: 30f/s
Effective Pixels	1920(H) x 1080(V)
WDR function	120dB Hardware WDR
TV System	PAL/NTSC
Viewing angle	150 Degree(H)
Lens	2.0mm
Power supply	DC 12V
Waterproof Level	IP69K

DNR	3D
S/N Ratio	≥48dB
Sync System	Internal
White balance	ON
AGC	Auto
Backlight compensation	HLC
Auto Iris	Video/DC
Maximum current	<60mA
Minimum Illumination	0.01Lux @(F1.2,AGC ON)
Video Output	1.0 Vp-p/75 Ohm
Electronic shutter response time	1/50-1/20000
Surge protection	Support video lightning protection tube
Reverse polarity protection	Yes
Connector	4pin aviation
Operating Temperature	-30℃～70℃, RH 95% MAX
Certificate	CE, UKCA, FCC

Pinout Diagram



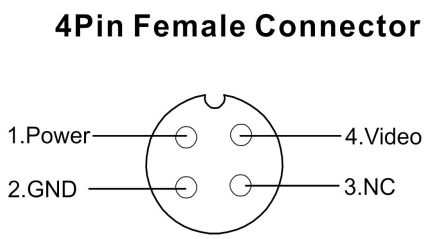

©Standtop 2026. All Rights Reserved